XIII. *On an Improvement in the Manner of dividing astronomical Instruments.* *By* Henry Cavendish, *Esq. F. R. S.*

Read May 18, 1809.

THE great inconvenience and difficulty in the common method of dividing, arises from the danger of bruising the divisions by putting the point of the compass into them, and from the difficulty of placing that point mid-way, between two scratches very near together, without its slipping towards one of them, and it is this imperfection in the common process, which appears to have deterred Mr. TROUGHTON from using it, and thereby gave rise to the ingenious method of dividing described in the preceding part of this volume. This induced me to consider, whether the abovementioned inconvenience might not be removed, by using a beam compass with only one point, and a microscope instead of the other; and I find, that in the following manner of proceeding, we have no need of ever setting the point of the compass into a division, and consequently that the great objection to the old method of dividing is entirely removed.

In this method, it is necessary to have a convenient support for the beam compass: and the following seems to me to be as convenient as any. Let C C C (Fig. 1.) be the circle to be divided, B B B a frame resting steadily on its face, and made to slide round on it with an adjusting motion to bring it to any required point: $d\delta$ is the beam compass, having a point near

δ, and a microscope m made to slide from one end to the other. This beam compass is supported at d, in such manner as to turn round on this point as a centre, without shake or tottering; and at the end δ it rests on another support, which can readily be lowered, so as either to let the point rest on the circle, or to prevent its touching it. It must be observed, however, that as the distance of d from the center of the circle must be varied, according to the magnitude of the arch to be divided, the piece on which d is supported had best be made to slide nearer to, or further from, the center; but the frame must be made to bear constantly against the edge of the circle to be divided, so that the distance of d from the center of this circle, shall not alter by sliding the frame.

This being premised, we will first consider the manner of dividing by continued bisection. Let F and f be two points on this limb which are to be bisected in φ. Take the distance of the microscope from the point nearly equal to the chord of $f\varphi$, and place d so that the point and the axis of the microscope shall both be in the circle in which the divisions are to be cut. Then slide the frame BBB till the wire of the microscope bisects the point F; and having lowered the support at δ, make a faint scratch with the point.

Having done this, turn the beam compass round on the center d till the point comes to D, where it must rest on a support similar to that at δ; and having slid the frame till the wire of the microscope bisects the point f, make another faint scratch with the point, which if the distance of the microscope from the point has been well taken, will be very near the former scratch; and the point mid-way between them will be the accurate bisection of the arch Ff; but it is unnecessary,

and better not to attempt to place a point between these two scratches.

Having by these means determined the bisection at ϕ, we must bisect the arches Fϕ and $f\phi$ in just the same manner as before, except that the wire of the microscope must be made to bisect the interval between the two faint scratches, instead of bisecting a point.

It must be observed, that when the arch to be bisected is small, it will be necessary to use a bent point, as otherwise it could not be brought near enough to the axis of the microscope; and then part of the rays, which form the image of the object seen by the microscope, will be intercepted by the point; but I believe, that by proper management this may be done without either making the point too weak, or making the image indistinct; but if this cannot be done, we may have recourse to Mr. TROUGHTON's expedient of bisecting an odd number of contiguous divisions.

It must be observed too, that in the bisections of all the arches of the same magnitude, the position of the point *d* on the frame remains unaltered; but its position must be altered every time the magnitude of the arch is altered.

It is scarcely necessary to say, that the bisections thus made are not intended as the real divisions, but only as marks from which they are to be cut. In order to make the real divisions, the microscope must be placed near the point, and the support *d* must be placed so that $d\delta$ shall be a tangent to the circle at δ. The wire of the microscope must then be made to bisect one of these marks, and a point or division cut with the point, and the process continued till the divisions are all made.

It is plain that in this way, without some further precaution,

we must depend on the microscope not altering its position in respect of the point during the operation; for which reason I should prefer placing the axis of the microscope at exactly the same distance from the center of motion *d*, as the point; but removed from it sideways, by nearly the semi-diameter of the object glass; so that having made the division, we may move the beam compass till the division comes within the field of the microscope, and then see whether it is bisected by the wire, and consequently see whether the microscope has altered its place,

In the operation of bisection, as above described, it may be observed, that if the two scratches are placed so near together, that in making the second the point of the compass runs into the burr raised by the first, there seems to be some danger that the point may be a little deflected from its true course; though in BIRD's account of his method, I do not find that he apprehends any inconvenience from it. One way of obviating this inconvenience, if it does exist, would be to set the beam compass not so exactly to the true length, as that one scratch should run into the burr of the other; but as this would make it more difficult to judge of the true point of bisection, perhaps it might be better to make one scratch extend from the circle towards the center, and the other from it.

It is clear, that the entire arc of a circle cannot be divided to degrees, without trisection and quinquesection; and I do not know whether our artists have recourse to this operation, or whether they avoid it by some contrivance similar to BIRD's, namely, that of laying down an arch capable of continued bisection; but if the method of quinquesection is preferred, it may be performed by either of the three following methods:

First Method.

Let $a\,\alpha$ (Fig. 2) be the arch to be quinquesected. Open the beam compass to the chord of one fifth of this arch; bring the microscope to a, and with the point make the scratch f; then bring the microscope to f, and draw the scratch e; and in the same manner make the scratches d and b. Then turn the beam compass half round, and having brought the microscope to α, make the scratch β; and proceeding as before, make the scratches δ, ε and φ. Then the true position of the first quinquesection will be between b and β, distant from β by one fifth of $b\,\beta$; and the second will be distant from δ by two fifths of $d\,\delta$, and so on.

Then, in subdividing these arches, and striking the true divisions, the wire of the microscope, instead of bisecting the interval between the two scratches, must be brought four times nearer to β than to b. But in order to avoid the confusion which would otherwise proceed from this, it will be necessary to place marks on the limb opposite to all those divisions, in which the interval of the scratches is not to be bisected, shewing in what proportion they are to be divided; and these marks should be placed so as to be visible through the microscope, at the same time as the scratches. Perhaps, the best way of forming these marks, would be to make dots with the point of the beam compass contiguous to that scratch which the wire is to be nearest to, which may be done at the time the scratch is drawn.

Perhaps an experienced eye might be able to place the wire in the proper manner, between the two scratches, without further assistance; but the most accurate way would be to

have a moveable wire with a micrometer, in the focus of the microscope, as well as a fixed one; and then having brought the fixed wire to b, bring the moveable one to β, and observe the distance of the two wires by the micrometer; then reduce the distance of the two wires to one fifth part of this, and move the frame till the moveable wire comes to β, and then the fixed wire will be in the proper position, that is four times nearer to β than to b.

It will be a great convenience, that the moveable wire should be made in such manner, as to be readily distinguished from the fixed, without the trouble of moving it.

In this manner of proceeding, I think a careful operator can hardly make any mistake: for if he makes any considerable error in the distance of the moveable wire from the fixed, it will be detected by the fixed wire not appearing in the right position, in respect of the two scratches; and as the mark is seen through the microscope, at the same time as the scratches, there is no danger of his mistaking which scratch it is to be nearest to, or at what distance it is to be placed from it.

To judge of the comparative accuracy of this method with that of bisection, it must be considered that the arches $\alpha\beta$, $\beta\delta$, &c. though made with the same opening of the compass, will not be exactly alike, owing partly to irregularities in the brass, and partly to other causes. Let us suppose, therefore, that in dividing the arch $a\alpha$ into five parts, the beam compass is opened to the exact length, but that from the abovementioned irregularities the arches $\alpha\beta$, $\beta\delta$, $\delta\varepsilon$, and $\varepsilon\varphi$ are all too long by the small quantity ε, and that the arches af, fe, ed, and db are all too short by the same quantity, which is the supposition the most unfavourable of any to the exactness of

the operation; then the error in the position of $\beta = \varepsilon$, and the point b errs 4ε in the same direction, and therefore the point assumed as the true point of quinquesection, will be at the distance of $\frac{3\varepsilon}{5}$ from β, and the error in the position of this point $= \varepsilon \times 1\frac{3}{5}$.

By the same way of reasoning, the error in the position of the point taken between d and $\delta = \varepsilon \times 2\frac{2}{5}$.

In trisecting the error of each point $= \varepsilon \times 1\frac{1}{3}$; and in bisecting, the error $= \varepsilon$; and in quadrisecting, the error of the middle point $= 2\varepsilon$.

It appears therefore that in trisecting, the greatest error we are liable to does not exceed that of bisection in a greater proportion than that of 4 to 3; but in quinquesecting the error of the two middle points is $2\frac{2}{5}$ times greater than in bisecting. It must be considered, however, that in the method of continued bisection, the two opposite points must be found by quadrisection; and the error of quinquesection exceeds that of quadrisection in no greater proportion than that of six to five; so that we may fairly say, that if we begin with quinquesection, this method of dividing is not greatly inferior, in point of accuracy, to that by continued bisection.

Second Method.

This differs from the foregoing, in placing dots or scratches in the true points of quinquesection and trisection, before we begin to subdivide. For this purpose, we must have a microscope placed as in page 224, first par. at the same distance from the center of motion as the point is; and this microscope must be furnished with a moveable wire and micrometer, as in page

226; and then having first made the fixed wire of this microscope correspond exactly with the point, we must draw the scratches *b* and β, *d* and δ, &c. as before, and bring the fixed wire to the true point of quinquesection between *b* and β, in the manner directed in page 226, and with the point strike the scratch or dot; and if we please, we may, for further security, as soon as this is done, examine, by means of the moveable wire, whether this intermediate scratch or dot is well placed.

The advantage of this method is, that when this is done, we may subdivide and cut the true divisions, by making the wire of the microscope bisect the intermediate scratches, instead of being obliged to use the more troublesome operation of placing it in the proper proportion of distance between the two extremes.

This method certainly requires less attention than the former, and on the whole seems to be attended with considerably less trouble; but it is not quite so exact, as we are liable to the double error of placing the intermediate point and of subdividing from it.

As in this method the intermediate points are placed by means of the micrometer, there is no inconvenience in placing the extreme scratches *b* and β, &c. at such a distance from each other, that the intermediate one shall be in no danger of running into the bur raised by the extremes.

Third Method.

Let $a\alpha$ (Fig. 3) be the arch to be quinquesected; lay down the arches *ab*, *bd*, and *dc*, as in the first method; then turn the beam compass half round, and lay down the arches $\alpha\beta$

and $\beta\,\delta$; then, without altering the frame, move the moveable wire of the microscope till it is four times nearer to δ than to e, and, having first rubbed out the former scratches, lay them down again with the compass thus altered; but as this method possesses not much, if any, advantage over the second, in point of ease, and is certainly inferior to it in exactness, it is not worth while saying any thing further about it.

It was before said,* that the center of motion of the beam compass is to be placed, so that the point and axis of the microscope shall both be in the circle in which the divisions are made; but it is necessary to consider this more accurately. Let A δ (Fig. 4) be the circle in which the scratches are to be made, δ the point of the beam compass, which we will suppose to be exactly in this circle, d the center on which it turns, and M m the wire in the focus of the microscope, and let m be that point in which it is cut by the circle; and let us suppose that this point is not exactly in the line $d\,\delta$, then, when the beam compass is turned round, the circle will cut the wire in a different point μ, placed as much on one side of $d\,\delta$, as m is on the other, so that if the wire is not perpendicular to $d\,\delta$, the arch set off by the beam compass, after being turned round, will not be the same as before; but if it is perpendicular, there will be no difference; for which reason, care should be taken to make the wire exactly perpendicular to $d\,\delta$, which is easily examined by observing whether a point appears to run along it, while the beam compass is turned a little on its center. It is also necessary to take care that the point δ is in the arc of the circle, while the bisection is observed by the microscope, which may most conveniently be obtained, by placing a stop

* Page 222.

on the support on which that end of the beam compass rests. If proper care, however, is taken in placing the wire perpendicular, no great nicety is required either in this or in the position of *d*.

Another thing to be attended to, in making the wire bisect two scratches, is to take care that it bisects them in the part where they cut the circle; for as the wire is not perpendicular to the circle, except in very small arches, it is plain, that if it bisects the scratches at the circle, it will not bisect them at a distance from it.

There are many particulars in which my description of the apparatus to be employed will appear incomplete; but as there is nothing in it which seems attended with difficulty, I thought it best not to enter further into particulars, than was necessary to explain the principle, and to leave the rest to any artist who may choose to try it.

It is difficult to form a proper judgment of the conveniences or inconveniences of this method, without experience; but, as far as I can judge, it must have much advantage, both in point of accuracy and ease, over that of dividing by the common beam compasses; but it very likely may be thought that Mr. TROUGHTON's method, is better than either. Whether it is or is not, must be left for determination to experience and the judgment of artists. Thus much, however, may be observed, that this, as well as his, is free from the difficulty and inaccuracy of setting the point of a compass exactly in the center of a division. It also requires much less apparatus than his, and is free from any danger of error, from the slipping or irregularity in the motion of a roller; in which respect his method, notwithstanding the precautions used by

Fig. 1.

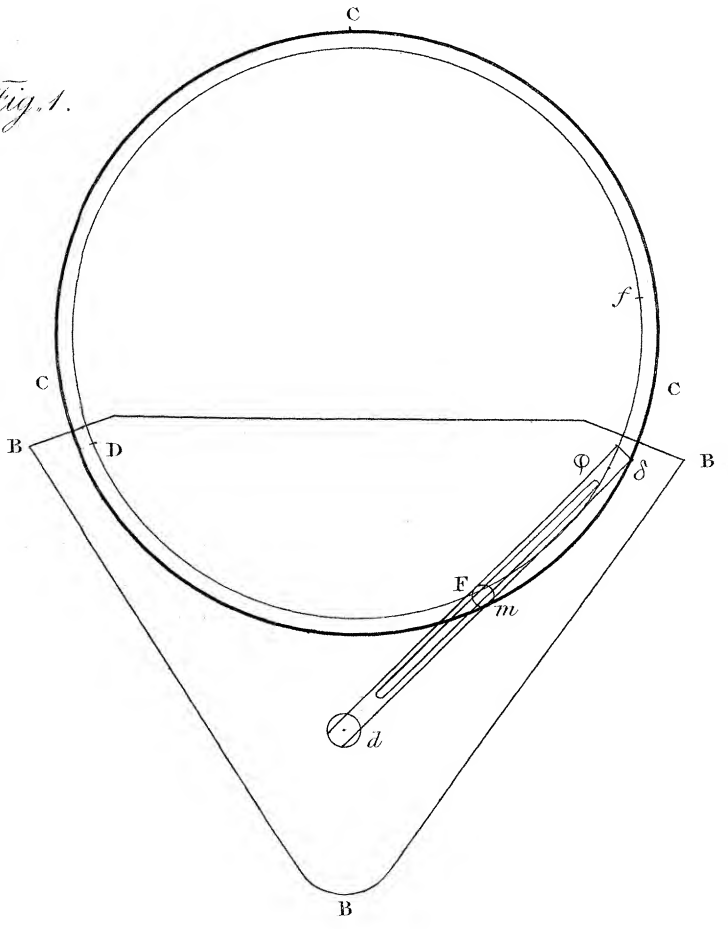

Fig. 2.

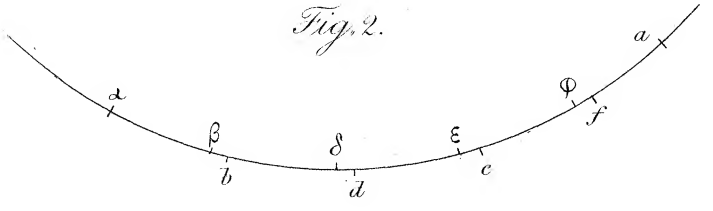

Fig. 3.

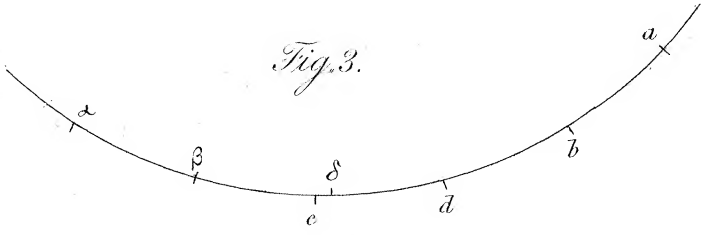

Fig. 4.

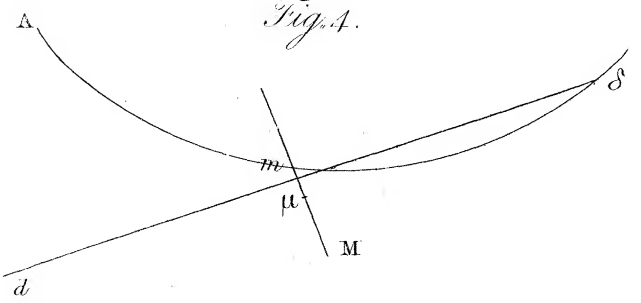

him, is perhaps not entirely free from objection; and what with some artists may be thought a considerable advantage, it is free from the danger of mistakes in computing a table of errors, and in adjusting a sector according to the numbers of that table.